Work Order ID 51145

September 1, 2009 10:12:52 AM

Item ID: D3684-043 **Accept** **Setup Start**

Revision ID: C **Stop**

Item Name: MOUNT ASSEMBLY

Start Date: 08/14/2009 **Start Qty:** 2.00 **Cust Item ID:**

Required Date: 08/28/2009 **Req'd Qty:** 2.00 **Customer:**

Reference:

Approvals: **Process Plan:** MF **Date:** 09-09-01 **Tooling:** **Date:** **Run Start**

QC: **Date:** **SPC (Y/N):** **Date:** **Stop**

Sequence ID/ Work Center ID	Operation Description	Set Up/ Run Hours	Draw Number	Draw Rev.	Plan Code	Accept Qty	Reject Qty	Reject Number	Insp. Stamp
Draw Nbr	**Revision Nbr**								
D3684	Rev C								
100	Pick Kit	0.00							
Packaging	**Memo**	0.00				2	Ø		
Packaging									
110		0.00							
Small Fab	Small Fab					2	Ø		
Small Fab	**Memo**	0.00							
	1-Use anti-seize compound Tectly 502c Class 1,Mil-PRF-16173E or equivelent on thread and assemble as per dwg D3684 □2-Assemble D3684-049 & D3687-1 Using Sikaflex -241/-291 between mating surfaces as per Dwg D3684□***Ensure holes for AN3C Bolts are free Sealant								
120	QC5- Inspect part completeness to step on W/O	0.00							
QC	**Memo**	0.00				2	Ø		
Quality Control									

Work Order ID 51145

September 1, 2009 10:12:52 AM

Item ID: D3684-043 **Accept** **Setup Start**

Revision ID: C **Stop**

Item Name: MOUNT ASSEMBLY

Start Date: 08/14/2009 **Start Qty:** 2.00 **Cust Item ID:**

Required Date: 08/28/2009 **Req'd Qty:** 2.00 **Customer:**

Reference:

Run Start

Approvals: **Process Plan:** _____ **Date:** _____ **Tooling:** _____ **Date:** _____

Stop

QC: _____ **Date:** _____ **SPC (Y/N):** _____ **Date:** _____

Sequence ID/ Work Center ID	Operation Description	Set Up/ Run Hours	Draw Number	Draw Rev.	Plan Code	Accept Qty	Reject Qty	Reject Number	Insp. Stamp
130	Identify as per dwg & Stock Location: ~~59~~ 1392	0.00				9/9/1			
Packaging	**Memo**	0.00							
Packaging									
140	QC21- Final Inspection - Work Order Release	0.00				09/09/02			
QC	**Memo**	0.00							
Quality Control									

MF
09-09-02

Picklist Print

September 1, 2009 10:12:52 AM

Work Order ID: 51145

Parent Item: D3684-043RevC

Parent Item Name: MOUNT ASSEMBLY

Comments:

Start Date: 08/14/2009 **Required Date:** 08/28/2009

Start Qty: 2.00 **Required Qty:** 2.00

Component Item ID/ Item Name	Replacement Item ID	Mfg/ Purch	Bin Item	Primary Location	Last Location	Route Seq ID	Unit of Measure	Qty on Hand	Remaining Qty To Pick	Qty Issued	Date Issued	Status
AN3C12A Bolts		Purchased	No			110	Each	447.0000	8.0000			

Warehouse Location	Loc Qty	Loc Code		
Main Warehouse				
ST	447			
106993	7			
110155	2			
110552	3			SB 09/09/01 (2)
110584	17			
111916	20			
112314	398		8	

D3684-047RevC FWD LEG ASS'Y		Manufactured	No			110	Each	1.0000	2.0000			

Warehouse Location	Loc Qty	Loc Code		
Main Warehouse	B 48168		(2)	* SB 09/09/01 (2)
ST	1			
45600	1			

D3684-049RevC AFT LEG ASS'Y		Manufactured	No			110	Each	1.0000	2.0000			

Warehouse Location	Loc Qty	Loc Code		
Main Warehouse				
ST	1			
45601	1			SB 09/09/01 (2)
B 51148			(2) *	

Picklist Print

September 1, 2009 10:12:52 AM

Work Order ID: 51145

Parent Item: D3684-043RevC

Parent Item Name: MOUNT ASSEMBLY

Comments:

Start Date: 08/14/2009 **Required Date:** 08/28/2009

Start Qty: 2.00 **Required Qty:** 2.00

Component Item ID/ Item Name	Replacement Item ID	Mfg/ Purch	Bin Item	Primary Location	Last Location	Route Seq ID	Unit of Measure	Qty on Hand	Remaining Qty To Pick	Qty Issued	Date Issued	Status
D3687-1RevB MOUNT		Manufactured	No			110	Each	5.0000	2.0000			

Warehouse Location	Loc Qty	Loc Code
Main Warehouse		
ST	5	
45911	1	
46760	4	

SB 09/09/01 (2)

Component Item ID/ Item Name	Replacement Item ID	Mfg/ Purch	Bin Item	Primary Location	Last Location	Route Seq ID	Unit of Measure	Qty on Hand	Remaining Qty To Pick	Qty Issued	Date Issued	Status
D3692-1RevB SPACER		Manufactured	No			110	Each	736.0000	16.0000			

Warehouse Location	Loc Qty	Loc Code
Main Warehouse		
ST	59	
44827	8	
45672	14	
50325	37	
Main Warehouse		
ST127	677	
50736	269	16
51467	408	

SB 09/09/01 (2)

Picklist Print

September 1, 2009 10:12:52 AM

Work Order ID: 51145

Parent Item: D3684-043RevC

Parent Item Name: MOUNT ASSEMBLY

Comments:

Start Date: 08/14/2009 **Required Date:** 08/28/2009

Start Qty: 2.00 **Required Qty:** 2.00

Component Item ID/ Item Name	Replacement Item ID	Mfg/ Purch	Bin Item	Primary Location	Last Location	Route Seq ID	Unit of Measure	Qty on Hand	Remaining Qty To Pick	Qty Issued	Date Issued	Status
MS21043-3 Nut		Purchased	No			110	Each	5,342.000	8.0000			

Warehouse Location	Loc Qty	Loc Code	
OFFSHORE			
FG	80		
103691	80		
Main Warehouse			
ST	5262		
111819	76		
112243	210		8
112314	4976		

SB 09/09/01 ②

ITEM	QTY -043	PART NUMBER	DESCRIPTION
1	X	D3684-043	MOUNT ASSEMBLY
2	1	D3687-1	MOUNT
3	1	D3684-047	FWD LEG ASSY
4	1	D3684-049	AFT LEG ASSY
5	8	D3692-1	SPACER
6	4	AN3C-12A	BOLT
7	4	MS21043-3	NUT

#51145
mf
09-08-04

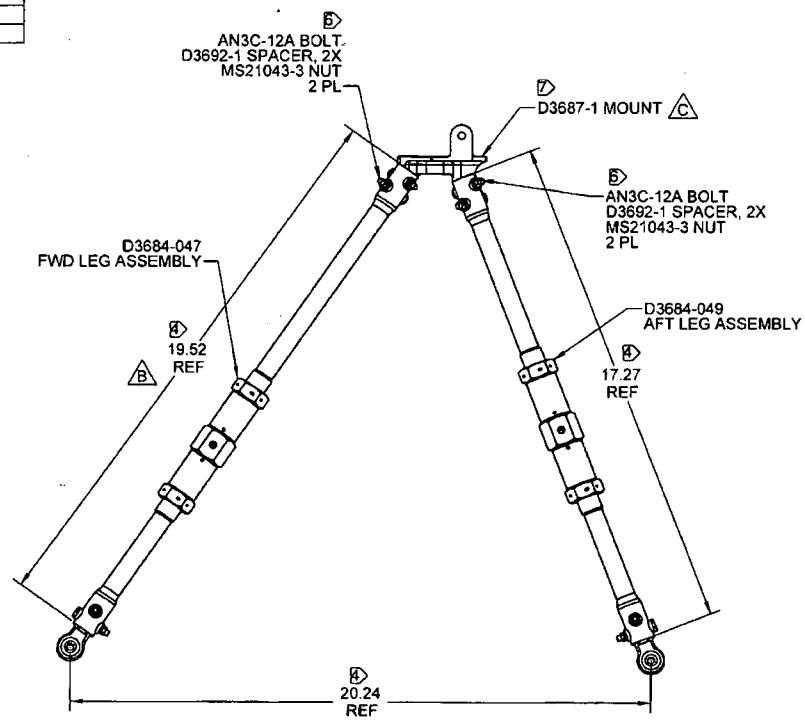

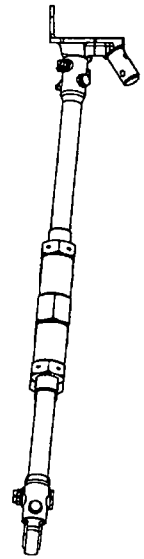

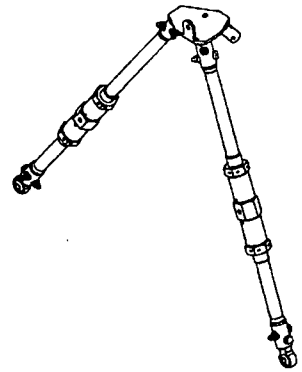

RELEASED
09/01/12

D3684-043 MOUNT ASSEMBLY

NOTES:
1) TOLERANCES: PER DART QSI 018 UNLESS OTHERWISE NOTED
2) UNITS: INCHES UNLESS OTHERWISE NOTED
3) IDENTIFICATION: IDENTIFY WITH DART ASSEMBLY P/N D3684-043 USING FINE POINT PERMANENT INK MARKER
4) DIMENSIONS SHOWN ARE WHEN D3688-1/-3 & D3691-1 STUDS ARE FULLY THREADED INTO D3689-1 SLEEVES
5) WEIGHT: 6.6 lbs
6) TORQUE FASTENERS TO 20-25 in-lbs
7) ASSEMBLE D3684-047 & D3684-049 WITH D3687-1 USING SIKAFLEX-241/-291 OR PROSEAL 890 OR MIL-S-8802 CLASS 'B2' SEALANT BETWEEN MATING SURFACES. ENSURE HOLES FOR AN3C BOLTS ARE CLEAR OF SEALANT (C)

DESIGN	RF	DART AEROSPACE LTD HAWKESBURY, ONTARIO, CANADA
DRAWN	RF	
CHECKED		DRAWING NO. D3684 — REV. C — SHEET 2 OF 5
MFG. APPR.		
APPROVED		TITLE: TRIPOD MOUNT ASSY — SCALE: NTS
DE APPR.		
DATE	08.12.15	

COPYRIGHT © 2008 BY DART AEROSPACE LTD
THIS DOCUMENT IS PRIVATE AND CONFIDENTIAL AND IS SUPPLIED ON THE EXPRESS CONDITION THAT IT IS NOT TO BE USED FOR ANY PURPOSE OR COPIED OR COMMUNICATED TO ANY OTHER PERSON WITHOUT WRITTEN PERMISSION FROM DART AEROSPACE LTD.

Dart Aerospace Ltd

W/O:		WORK ORDER CHANGES					
DATE	STEP	PROCEDURE CHANGE	By	Date	Qty	Approval Chief Eng / Prod Mgr	Approval QC Inspector

Part No: _____ **PAR #:** _____ **Fault Category:** _____ **NCR:** Yes No **DQA:** _____ **Date:** _____

Resolution: _____ **Disposition:** _____ **QA: N/C Closed:** _____ **Date:** _____

NCR:		WORK ORDER NON-CONFORMANCE (NCR)						
DATE	STEP	Description of NC Section A	Corrective Action Section B			Verification Section C	Approval Chief Eng	Approval QC Inspector
			Initial Chief Eng	Action Description Chief Eng	Sign & Date			

NOTE: Date & initial all entries

H:\fFORMS\Quality Assurance\approved QA\NCRWO RevE